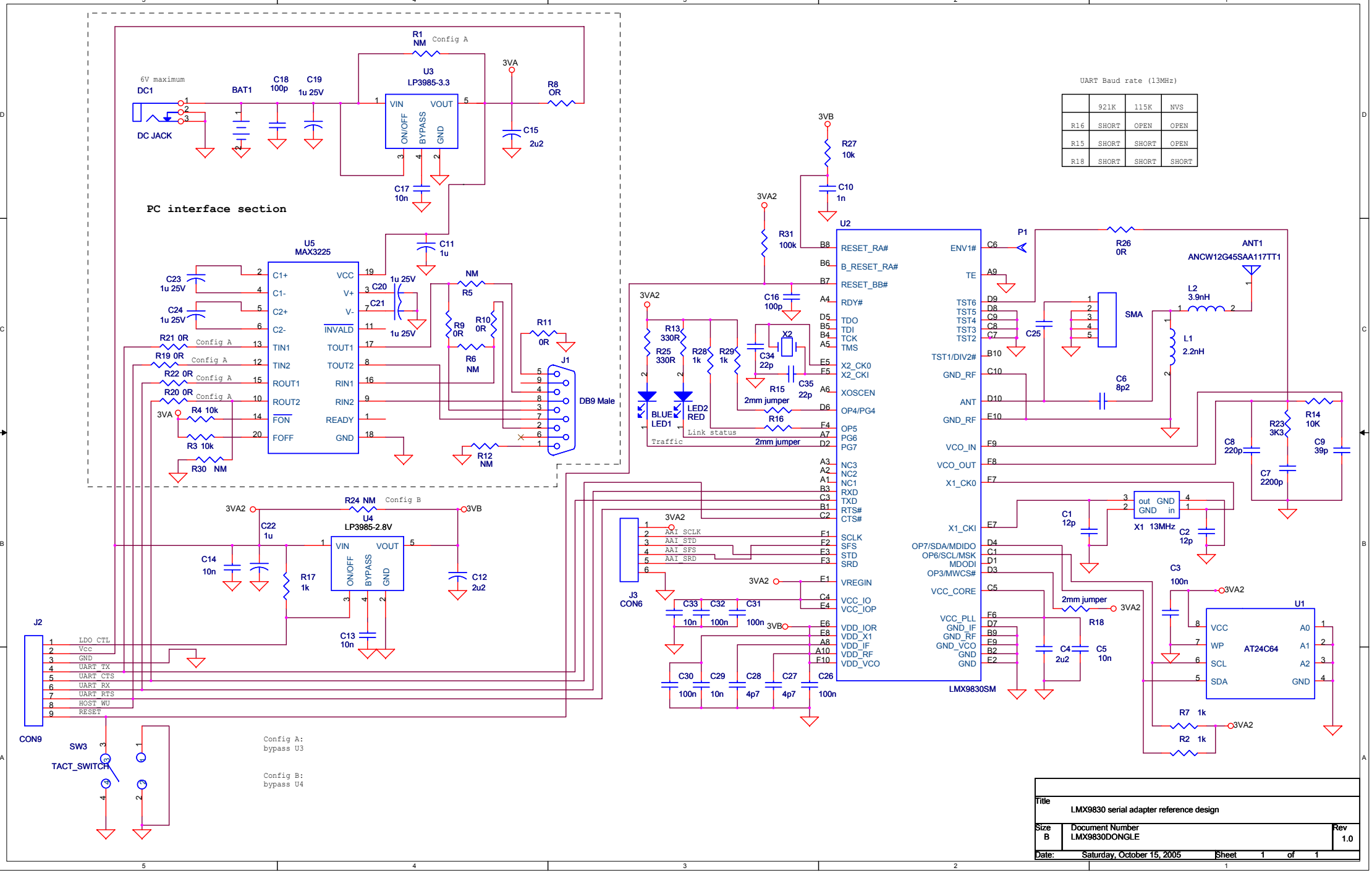

UART Baud rate (13MHz)

	921K	115K	NVS
R16	SHORT	OPEN	OPEN
R15	SHORT	SHORT	OPEN
R18	SHORT	SHORT	SHORT

Title	LMX9830 serial adapter reference design	
Size B	Document Number LMX9830DONGLE	Rev 1.0
Date: Saturday, October 15, 2005	Sheet 1 of 1	