NOTES UNLESS OTHERWISE SPECIFIED:

© COPYRIGHT 2008 TEXAS INSTRUMENTS
UN-PUBLISHED, ALL RIGHTS RESERVED.

REVISIONS

REV	DESCRIPTION	DATE	BY
A	ECO 2089657 - INITIAL RELEASE	12 MAY 08	DH

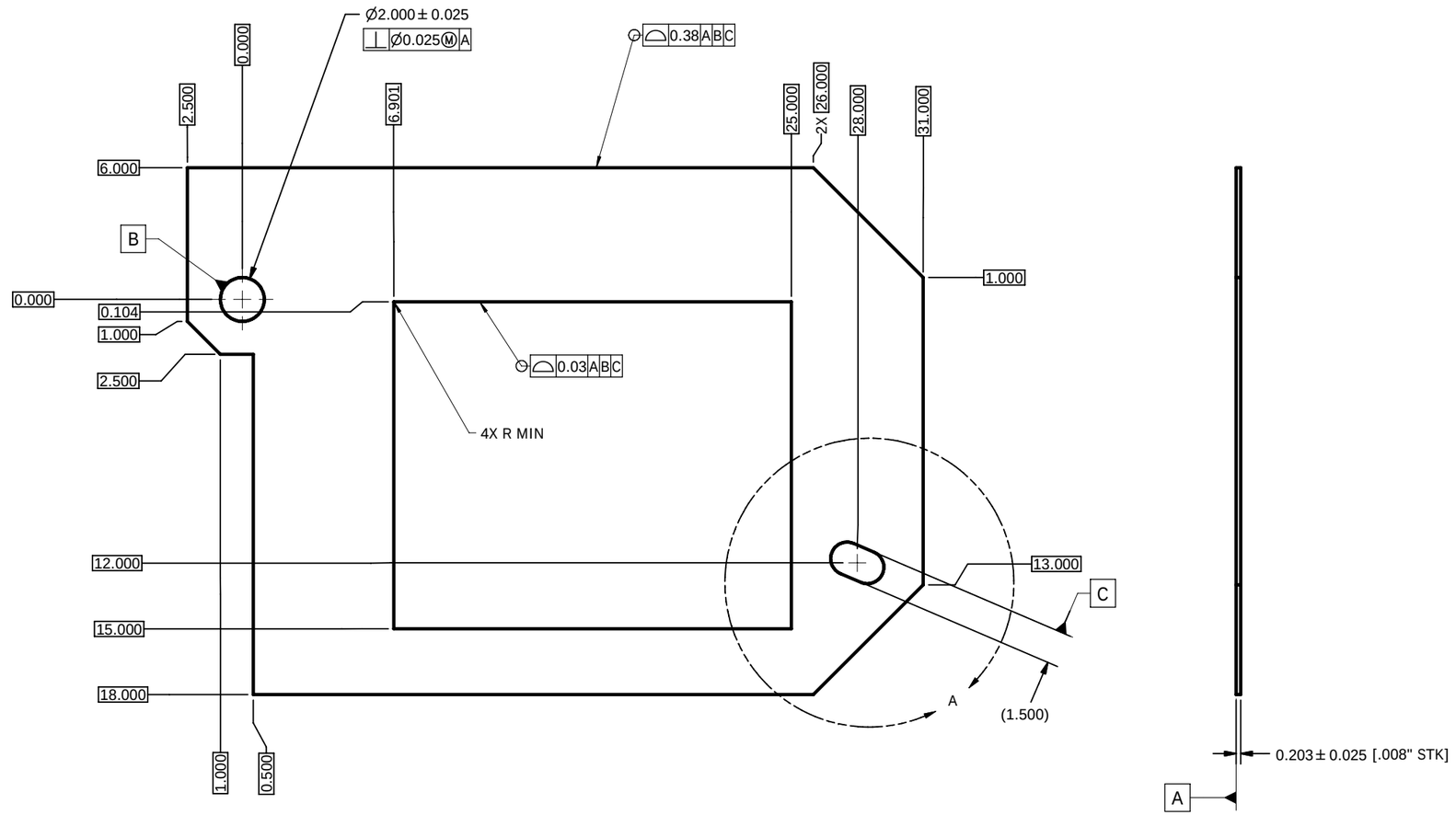

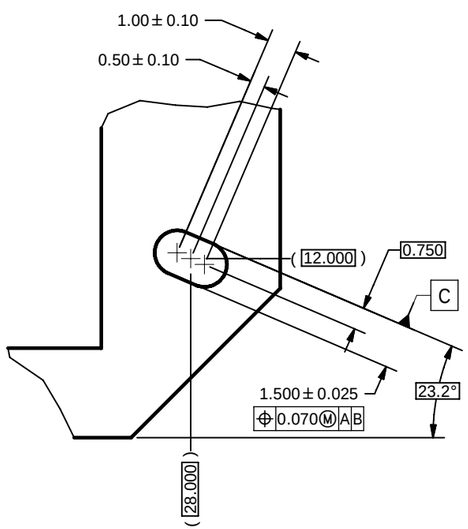

DETAIL A
SCALE 10 : 1

QTY	ITEM	PART NUMBER	DESCRIPTION	NOTES
AR	1		.008" THK STAINLESS STEEL, ALY 301	

PARTS LIST

NEXT ASSY	USED ON
	0314

APPLICATION

THIRD ANGLE PROJECTION

UNLESS OTHERWISE SPECIFIED
- DIMENSIONS ARE IN MILLIMETERS
- TOLERANCES:
  - ANGLES ± 1°
  - 2 PLACE DECIMALS ± 0.25
  - 1 PLACE DECIMALS ± 0.50
- DIMENSIONAL LIMITS APPLY BEFORE PROCESSES
- INTERPRET DIMENSIONS IN ACCORDANCE WITH ASME Y14.5M-1994
- REMOVE ALL BURRS AND SHARP EDGES
- PARENTHETICAL INFORMATION FOR REFERENCE ONLY

		DATE
DRAWN	HOLAMON	4/17/2008
ENGINEER	J. McKinley	5/12/2008
QA/CE		
CM		
APPROVED	J. McKinley	5/12/2008

TEXAS INSTRUMENTS
Dallas Texas

TITLE
APERTURE, SERIES 450

SIZE D | DWG NO 2509596 | REV A

SCALE 1:1 | SHEET 1 OF 1

INV11-2006a