© COPYRIGHT 2016 TEXAS INSTRUMENTS
UNPUBLISHED, ALL RIGHTS RESERVED

REVISIONS

REV	DESCRIPTION	DATE	BY
A	FORMAL RELEASE	08/29/2016	JTM

NOTES: UNLESS OTHERWISE SPECIFIED:

1. PLATE DMD PADS WITH A MINIMUM OF 30 MICROINCHES OF (ELECTROLYTIC) GOLD OVER 50 - 100 MICROINCHES OF NICKEL
2. FILL VIAS IN PAD AREAS
3. INTERPOSER OUTLINE; NO COMPONENTS ALLOWED WITHIN THIS AREA
4. NO COMPONENTS OR SURFACE ETCH ALLOWED WITHIN THIS AREA
5. NO COMPONENTS ALLOWED WITHIN THIS AREA

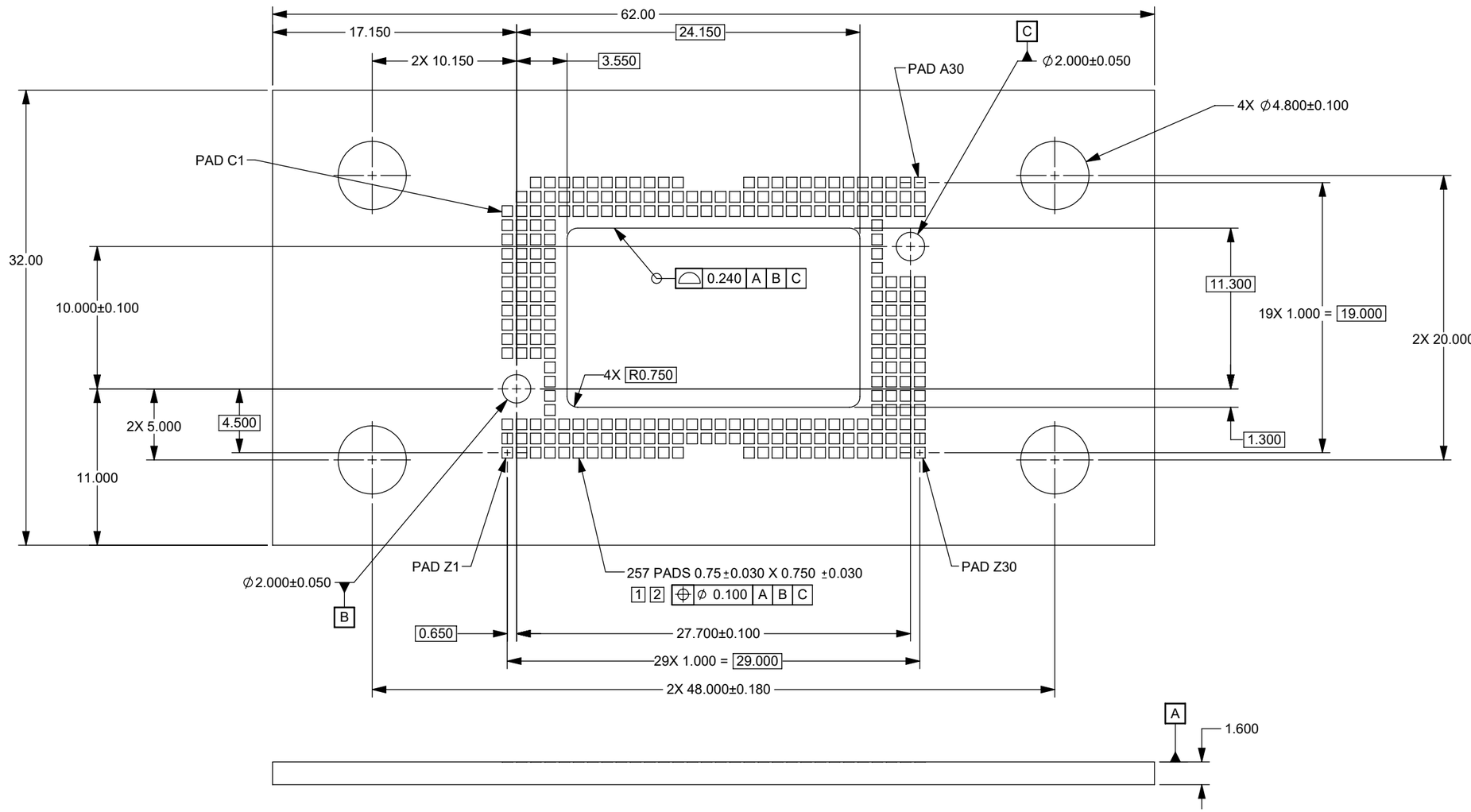

2515302	0314RD
NEXT ASSY	USED ON
APPLICATION	

THIRD ANGLE PROJECTION

UNLESS OTHERWISE SPECIFIED

- DIMENSIONS ARE IN MILLIMETERS
- TOLERANCES: ANGLES ±1°
  2 PLACE DECIMALS ±0.25
  1 PLACE DECIMALS ±0.50
- DIMENSIONAL LIMITS APPLY BEFORE PROCESSES
- INTERPRET DIMENSIONS IN ACCORDANCE WITH ASME Y14.5M-1994
- REMOVE ALL BURRS AND SHARP EDGES
- PARENTHETICAL INFO FOR REF ONLY

DWN J. McKINLEY	DATE 8/28/2016	
Engr		
CQE/QA		
CM		
Apprvd McKINLEY	8/29/2016	

TEXAS INSTRUMENTS

PCB, OUTLINE SERIES 410 EVM

SIZE	DWG NO	REV
B	2515307	A
SCALE 2:1	SHEET 1 OF 2	

SW-2012a

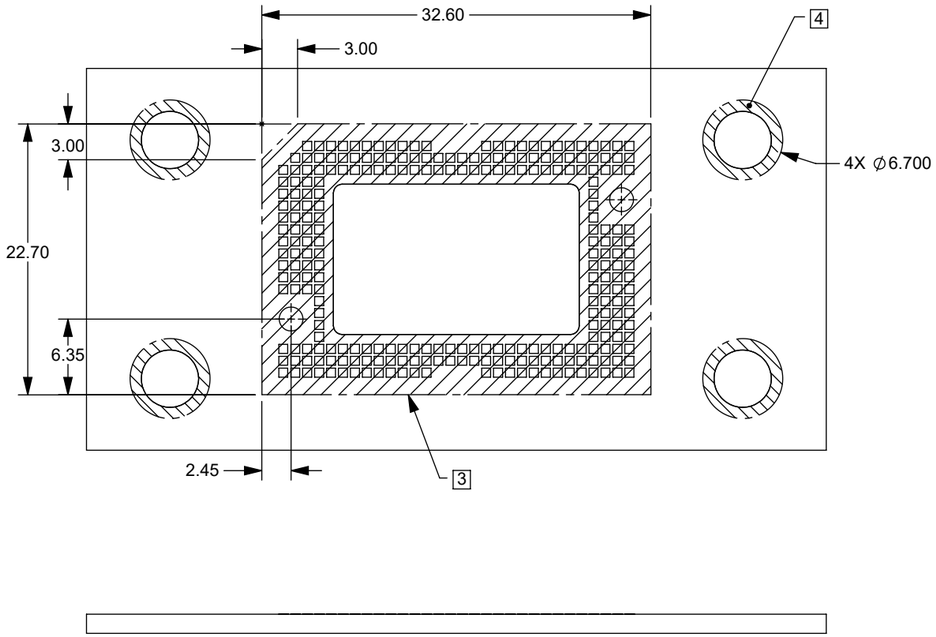

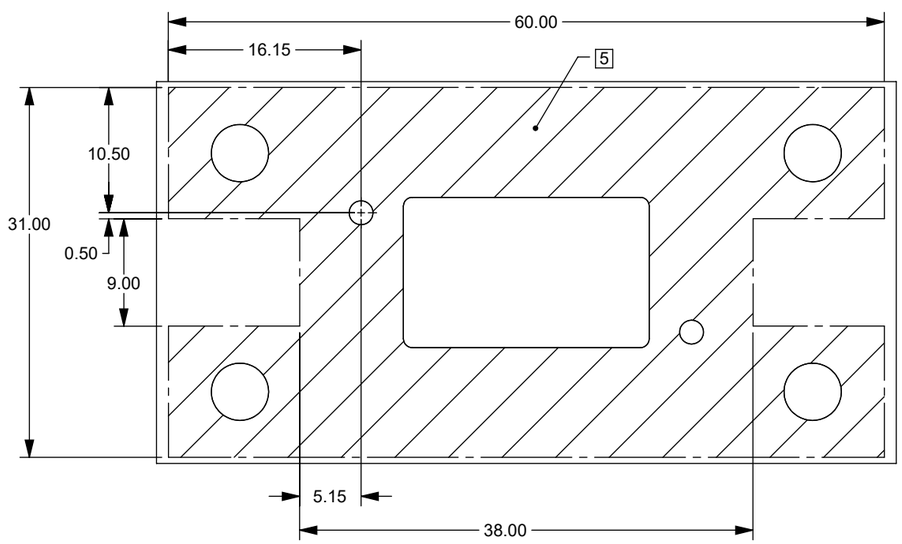

TEXAS INSTRUMENTS	DWN J. McKINLEY	DATE 8/28/2016	SIZE B		DRAWING NO 2515307-DMD-PCB-EVM	REV A
			SCALE 2:1		SHEET 2 OF 2	

SW-2012a