NOTES: UNLESS OTHERWISE SPECIFIED:
1. PARTS TO BE CLEAN AND OIL FREE

© COPYRIGHT 2016 TEXAS INSTRUMENTS
UNPUBLISHED, ALL RIGHTS RESERVED

REVISIONS

REV	DESCRIPTION	DATE	BY
A	INITIAL RELEASE	8/29/2016	JTM

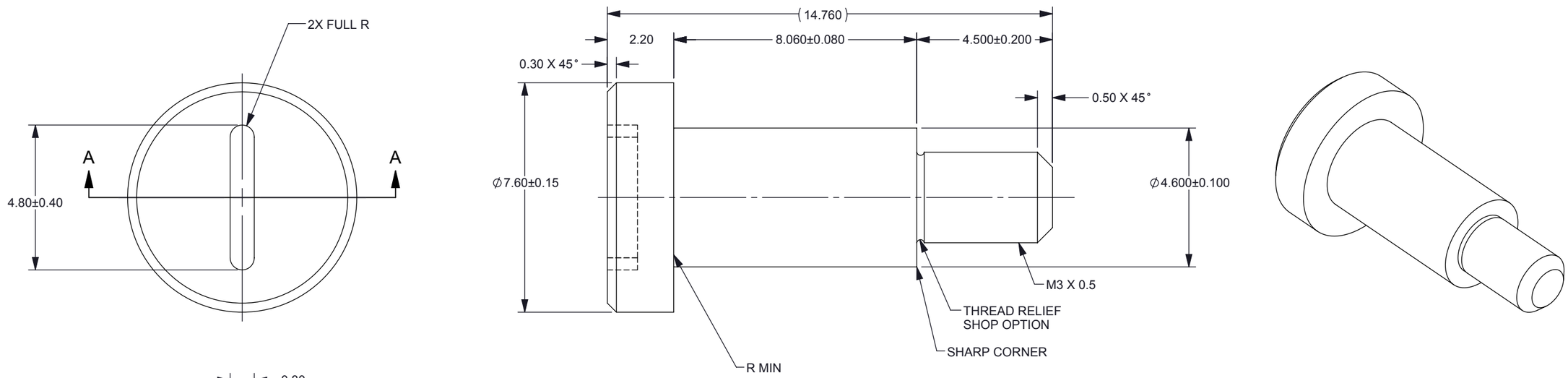

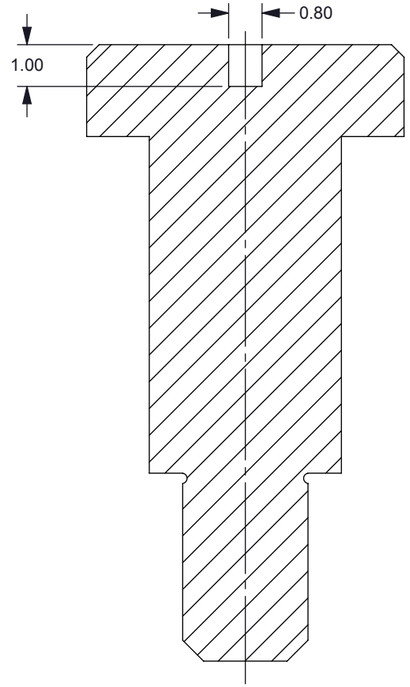

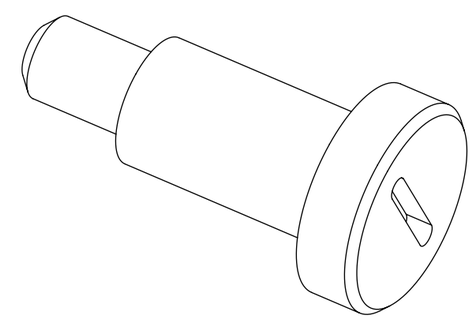

QTY	ITEM	PART NUMBER	DESCRIPTION	Notes
AR	1		STAINLESS STEEL ALY 303	

Part List

NEXT ASSY	USED ON
2515302	0314RD
2515244	0314RD

APPLICATION

THIRD ANGLE PROJECTION

UNLESS OTHERWISE SPECIFIED
- DIMENSIONS ARE IN MILLIMETERS
- TOLERANCES: ANGLES ±1°
  2 PLACE DECIMALS ±0.25
  1 PLACE DECIMALS ±0.50
- DIMENSIONAL LIMITS APPLY BEFORE PROCESSES
- INTERPRET DIMENSIONS IN ACCORDANCE WITH ASME Y14.5M-1994
- REMOVE ALL BURRS AND SHARP EDGES
- PARENTHETICAL INFO FOR REF ONLY

DWN J. McKINLEY DATE 8/19/2016
Engr
CQE/QA
CM
Apprvd McKINLEY 8/27/2016

TEXAS INSTRUMENTS

SCREW, SHOULDER, CONCEPT #1

SIZE B | DWG NO 2515251 | REV A
SCALE 2:1 | SHEET 1 OF 1

SW-2012a